PRODUCT SPECIFICATION

OUTDOOR LED DISPLAY MODULE

Product	Outdoor P6 1/8-Scan LED Module
Model	P6-8S-2525-Pro-7680HZ
Refresh Rate	7680Hz
Version	3.8
Document No.	-

Prepared by	Reviewed by	Approved (Seal)

Company: Shenzhen Hantu Jiashi Technology Co., Ltd.
Address: No. 40 Huaning Road, Dalang Subdistrict, Longhua District, Shenzhen, China
Tel.: 0755-23773619 | Email: chenhua@hitulcd.com | Website: https://hitudisplay.com/

Contents

Contents 2

1. Scope 3

2. Safety, Handling, and Operating Precautions 3

3. Product Overview 4

3.1 Product Features 4

3.2 Module Views 4

4. Technical Specifications 5

4.1 Display Technical Parameters 5

4.2 Cabinet Technical Parameters 5

4.3 Module Technical Parameters 5

5. Module Signal Interface 6

6. Product Model Naming Convention 6

7. Mounting Hole Diagrams 7

7.1 Module Mounting Hole Layout 7

7.2 Recommended 960*960 Cabinet Mounting Hole Layout 7

8. Installation Instructions 8

8.1 Power Supply and Module Wiring 8

8.2 Common Outdoor Installation Methods 8

9. Acceptance Requirements and Test Methods 9

9.1 Display Brightness 9

9.2 Viewing Angle 9

9.3 Grounding 9

9.4 Lightning Protection 9

1. Scope

This technical manual applies only to the outdoor large-format P6-8S-2525-Pro-7680HZ module. The parameters below are for the standard product; customization is available for special requirements.

Pixel Pitch	Module Resolution	Module Size	Refresh Rate
6.0mm	32*32=1024Dots	192*192*18mm	7680Hz

2. Safety, Handling, and Operating Precautions

Category	Requirement	Details
Environmental Precautions	Temperature Requirements	Storage temperature range: -10°C-30°C. If the temperature exceeds 30°C, cooling measures are required. Operating temperature range: -20°C-40°C. Temperature-control equipment is required outside this range. Module surface temperature during operation: ≤85°C. If this limit is exceeded, install temperature-control equipment.
Environmental Precautions	Humidity Requirements	Storage humidity range: 10%RH-60%RH. If humidity exceeds 60%RH, dehumidification is required. Operating humidity range: 10%RH -90%RH. If humidity is outside this range, condition the environment before normal use.
Environmental Precautions	Corrosive Gas Prevention	Corrosive gases in air containing salt or acid can corrode electronic components and cause crystal leakage and other failures.
Environmental Precautions	Electrostatic Hazard and Lightning Protection	The display metal components, switching power supply enclosure, and cabinet must be properly grounded. Grounding resistance: ≤10Ω; voltage to ground: ≤2V. Prevent electrostatic damage to electronic components and electric-shock injury caused by leakage current.
Operating Precautions	ESD Protection	Installation personnel must wear an ESD wrist strap and ESD gloves. All tools used during assembly must be properly grounded.
Operating Precautions	Display Waterproofing	After installation, ensure that no water can enter the display. Apply waterproof sealant around the display, cabinets, and cabinet joints, and implement strict waterproofing.
Operating Precautions	Hazards of Magnetic Mounting	Magnetic mounting of modules outdoors is not recommended. Outdoor magnetic mounting creates the following hazards: 1. Rain and snow can enter from the front to the rear of the display, immersing and corroding module-side ICs and electronic components, system cards, switching power supplies, and cables, causing premature failure. 2. Magnetic mounting cannot guarantee display flatness or seamless assembly. 3. Magnetic mounting can deform modules in extremely cold weather.
Operating Precautions	Product Batch Control	Products from different batches must not be installed on the same display; otherwise, color blocks (mosaic effect) may appear.
Operating Precautions	Product Wiring	Do not connect the module directly to 220V. Do not reverse the positive and negative module supply terminals.
Operating Precautions	Handling and Transportation	Do not drop, push, squeeze, or press the module, to avoid damaging the display.
Operating Precautions	Installation Torque Control	When wiring the power supply, tighten the terminal screws to prevent loose connectors, high contact resistance, burnt wiring, or product damage. M4 screw torque: 6.0-8.0 Kgf.cm; M3 screw torque: 4.0-6.0 Kgf.cm.
Operating Precautions	Playback Control	Do not display a static image or static text for an extended period, as this can cause serious LED brightness degradation or large-scale LED failure. Play moving images or scrolling text.
Operating Precautions	No Live-Line Work	Do not assemble modules while power is on. Disconnect the main power input before installing modules on the structure. Do not assemble with power and signal cables connected.
Operating Precautions	Loading Program Selection	Use the system card officially recommended by Shenzhen Hantu Jiashi Technology Co., Ltd. and the loading program used by the website's one-click commissioning function to prevent performance abnormalities during commissioning.
Operating Precautions	Parameter Settings	Set the refresh rate to the value specified in this specification to protect normal LED service life.

Category	Requirement	Details
Operating Precautions	Playback Control	Do not display static images, text, or fixed backgrounds for an extended period, as this can cause serious LED brightness degradation or large-scale LED failure. Play moving images or text.
Operating Precautions	Environmental Inspection	Provide temperature and humidity meters at the installation site and monitor the surrounding environment. After heavy rain, promptly inspect the inside of the display for moisture, water droplets, or water vapor.
Operating Precautions	Avoid Construction Around the Installed LED Display	After installation, construction around the LED display is strictly prohibited to prevent high-current surges and dust from affecting the display, such as during operation of welding machines, electric saws, or similar equipment.

3. Product Overview

- The display is formed by packaging red, green, and blue LED chips into individual pixels, arranging the pixels in a matrix, and securing the matrix to the plastic housing.
- The module contains driver ICs and input buffer ICs. When connected to an LED display control system, it can display video, images, text, and other information.
- The control system drives the red, green, and blue LEDs, enabling 43980 hundred million color variations.
- Modules and cabinets can be joined horizontally and vertically to create displays of different sizes.

3.1 Product Features

- High-quality LEDs with high brightness utilization, long LED service life, and high-quality plastic components.
- High contrast for excellent display performance.
- Lightweight construction for easy installation and removal.
- Single-pixel and single-LED maintenance capability at low cost.
- Horizontal constant-current driving improves LED uniformity while reducing power consumption.

3.2 Module Views

Front View	Rear View
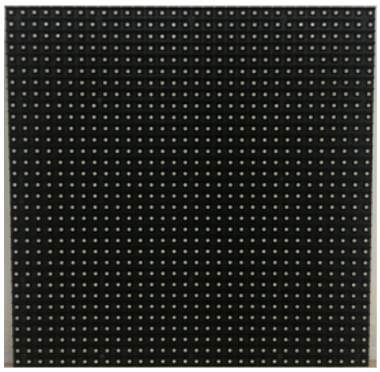	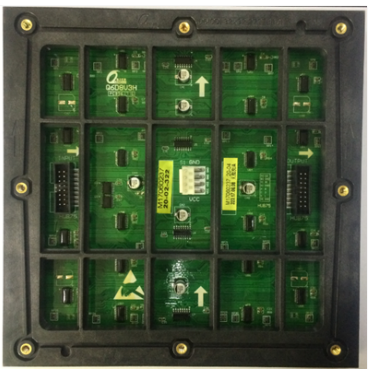

Note: The driver IC uses an SSOP-packaged constant-current driver IC.

4. Technical Specifications

4.1 Display Technical Parameters

Parameter	Value	Parameter	Value
Brightness	≥4500cd/m²	Brightness Uniformity	≥0.95
Horizontal Viewing Angle	140±10°	Vertical Viewing Angle	130±10°
Optimal Viewing Distance	≥10.8m	Operating Environment	Outdoor
Maximum Module Power per Square Meter	≤880W/m²	Power Distribution Capacity	≤1327W/m²
Grayscale	14-15bits each for red, green, and blue	Display Colors	43980 hundred million
Frame Rate	≥60 frames/s	Refresh Rate	7680Hz
Control Method	Computer control, pixel-to-pixel mapping, video synchronization, real-time display	Brightness Adjustment	256 levels, manual/automatic
Input Signals	DVI/VGA/HDMI/DP composite video signals, S-VIDEO, YpbPr(HDTV)	Mean Time Between Failures	≥5000 hours
Operating Temperature Range	-20-40°C	Operating Humidity Range	10%-90%RH
Protection Features	Overtemperature/overload/power-loss/image compensation/correction technology/overcurrent/overvoltage/lightning protection (optional)	Display Flatness	Horizontal ≤1mm/m²; Vertical ≤1mm/m²

4.2 Cabinet Technical Parameters

Parameter	Value
Cabinet Dimensions (L*W*T)	768mm*768mm*90mm (including the module)
Cabinet Resolution	128*128=16384 Dots
Cabinet Area	0.59m²
Cabinet Weight	18.5kg±0.5 kg
Maximum Power Consumption (module power * number of modules per cabinet)	≤519W
Average Power Consumption (1/3 of maximum power)	≤173W
Power Distribution Capacity (power-supply utilization 78%; maximum power ÷78%)	≤665W

4.3 Module Technical Parameters

Parameter	Value	Parameter	Value
Pixel Pitch	6.0mm	Pixel Density	27777Dots/m²
Pixel Configuration	1R1G1B	LED Package	SMD2525
Dimensions (L*W*T)	192*192*18mm	Weight	0.32kg±0.01kg
Structural Feature	Integrated LED and Driver	Module Resolution	32*32=1024Dots
Input Voltage (DC)	4.2±0.1V	Maximum Current	≤7.75A
Module Power	≤33W	Drive Method	1/8 constant-current drive
Modules per 40A Power Supply	3-4 modules	Modules per 50A Power Supply	4-5 modules
Modules per 40A PFC Power Supply	4-5 modules	Modules per 80A Power Supply	7-8 modules

5. Module Signal Interface

HUB75 interface definition:

Pin	Signal	Function	Pin	Signal	Function
1	RD1	Red Data Signal	2	GD1	Green Data Signal
3	BD1	Blue Data Signal	4	GND	Power Ground
5	RD2	Red Data Signal	6	GD2	Green Data Signal
7	BD2	Blue Data Signal	8	GND	Power Ground
9	A	Row Power Control Signal	10	B	Row Power Control Signal
11	C	Row Power Control Signal	12	D	Row Power Control Signal
13	CLK	Clock Signal	14	LAT	Data Latch Signal
15	OE	Enable Signal	16	GND	Power Ground

6. Product Model Naming Convention

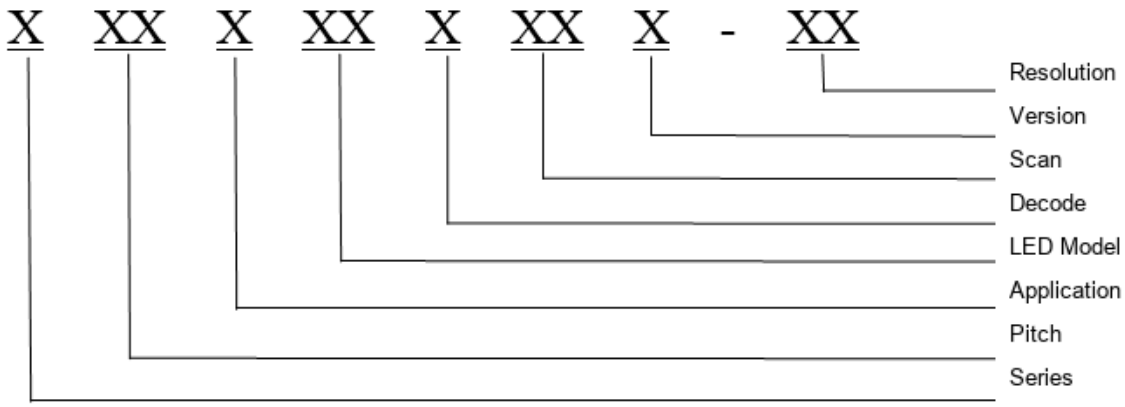

7. Mounting Hole Diagrams

7.1 Module Mounting Hole Layout

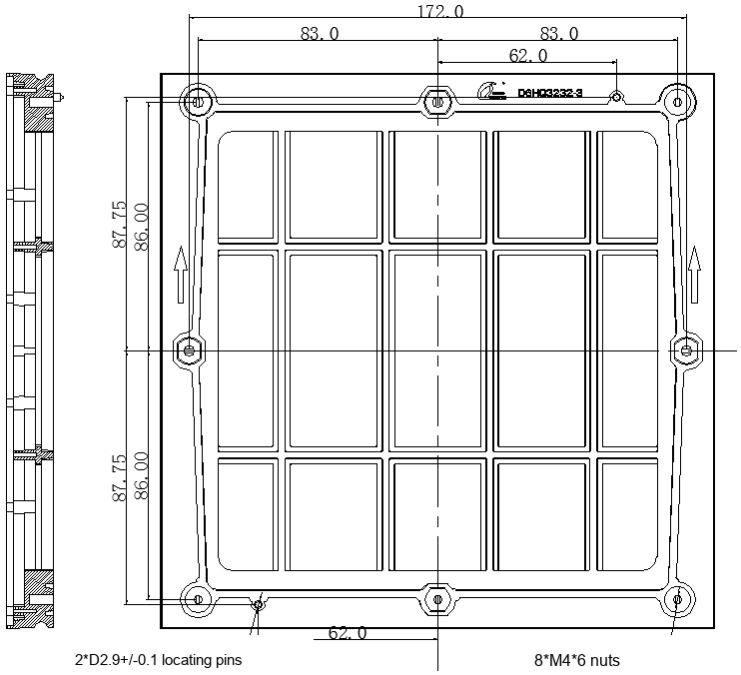

Note: If a cabinet is to be manufactured, notify the local office in advance and confirm the mounting-hole drawing for the ordered product. See the CAD drawing for details. All dimensions are in mm.

7.2 Recommended 960*960 Cabinet Mounting Hole Layout

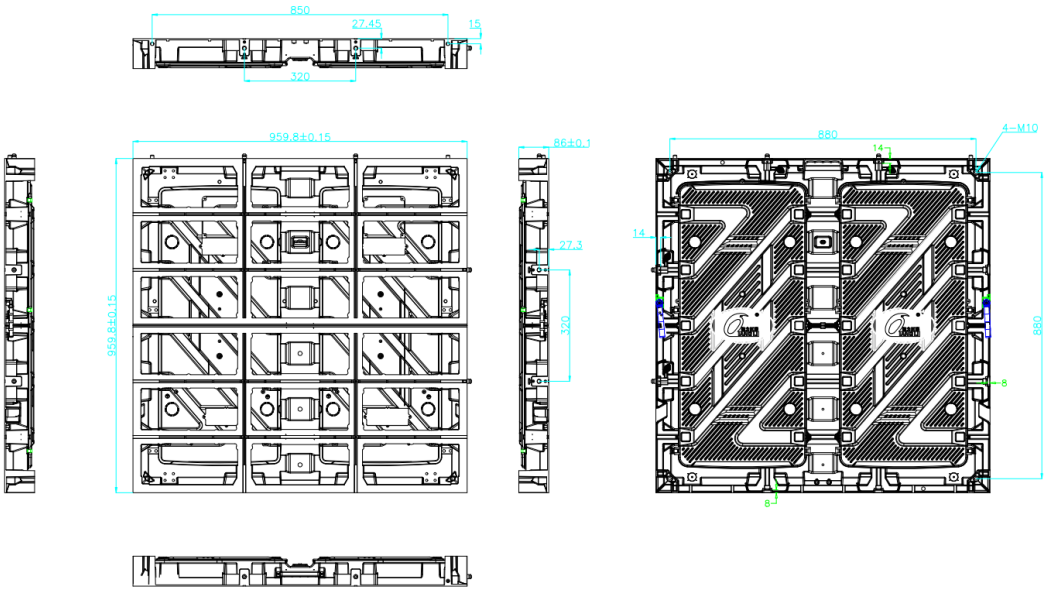

Note: All dimensions are in mm.

8. Installation Instructions

8.1 Power Supply and Module Wiring

The diagram is for reference only. Use the actual product to confirm the wiring method.

Wiring: one power cable
for every two modules

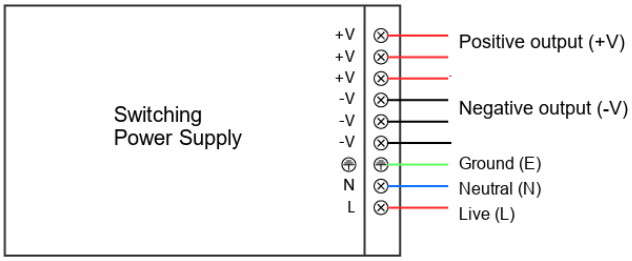

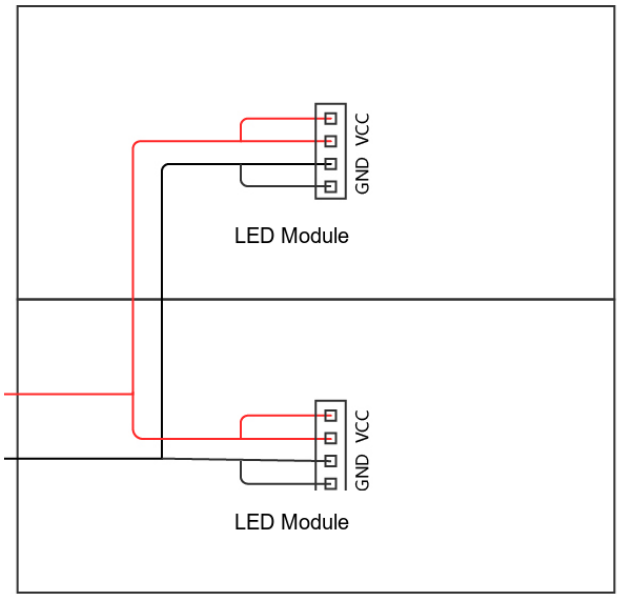

8.2 Common Outdoor Installation Methods

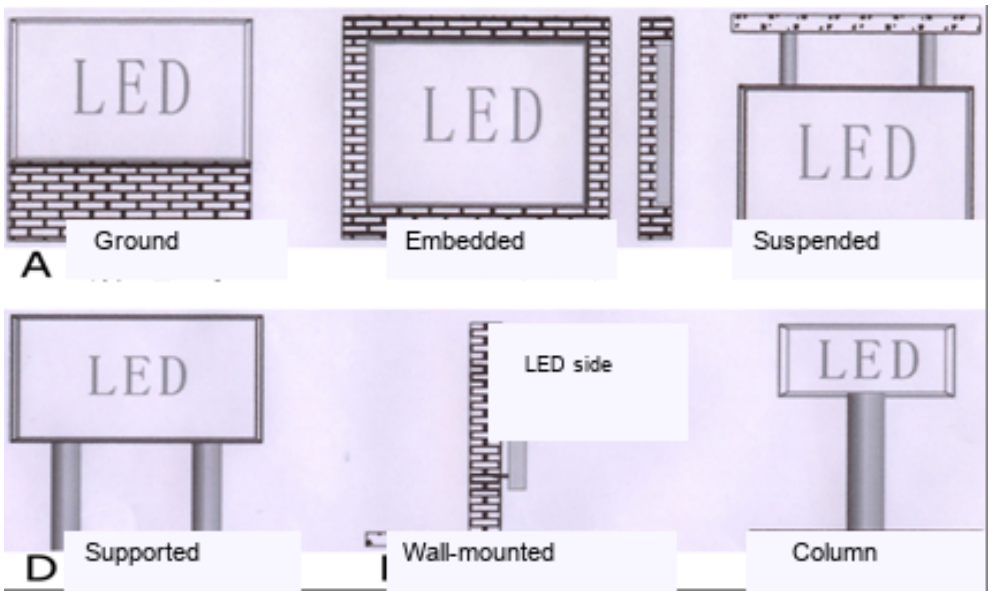

Install cabinets starting from the bottom row. Do not install them out of sequence, as this will affect display performance. Ensure that the bottom row is extremely level before installing the upper cabinets. Apply waterproof sealant to every cabinet joint. After commissioning the complete display, strictly waterproof the entire perimeter of the display structure.

9. Acceptance Requirements and Test Methods

9.1 Display Brightness

Set the display to full brightness and set the brightness efficiency in the computer test software to 80%. Within 10 minutes, measure display brightness using a luminance meter. Aim the meter at the display and, preferably, keep it level with the display during measurement. Ensure that the black area of the viewing window covers at least 16 pixels, then adjust the focus and take the measurement.

9.2 Viewing Angle

Observe from positions 140° to the left and right of the display and at a 65° downward viewing angle. The display must have no obvious black spots or dark areas.

Vertical Viewing Angle	Horizontal Viewing Angle
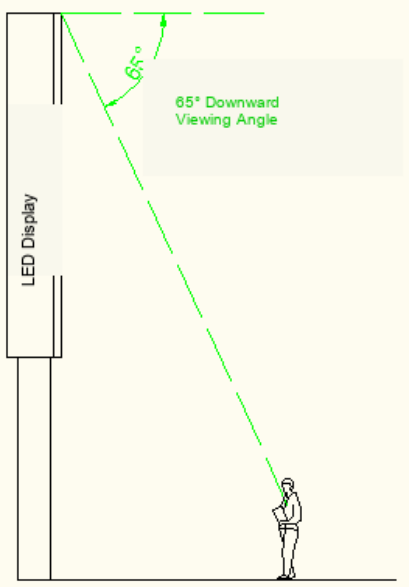	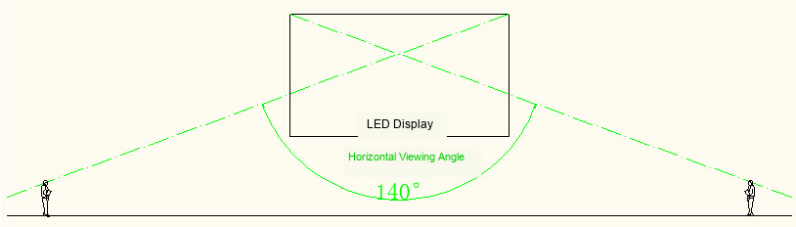

9.3 Grounding

Properly ground the switching power supply enclosure, cabinet, and display structure. Clearly identify each grounding point and inspect it once every six months.

9.4 Lightning Protection

The building must have a lightning rod or lightning protection belt that is effectively grounded. The distribution box must be fitted with a surge protector. Inspect the lightning protection facilities once every six months.