PRODUCT SPECIFICATION

OUTDOOR LED DISPLAY MODULE

Product	Outdoor R4 1/10-Scan Flexible LED Module
Model	R4-10S-1921-Pro-4200HZ
Refresh Rate	4200Hz
Version	1.2
Document No.	-

Prepared by	Reviewed by	Approved (Seal)

Company: Shenzhen Hantu Jiashi Technology Co., Ltd.
Address: No. 40 Huaning Road, Dalang Subdistrict, Longhua District, Shenzhen, China
Tel.: 0755-23773619 | Email: chenhua@hitulcd.com | Website: https://hitudisplay.com/

Contents

Contents 2

1. Scope 3

2. Safety, Handling, and Operating Precautions 3

3. Product Overview 4

3.1 Product Features 4

3.2 Module Views 4

3.3 Curved Cabinet Reference 5

4. Technical Specifications 6

4.1 Display Technical Parameters 6

4.2 Flexible Module Technical Parameters 6

5. Module Signal Interface 6

6. Product Model Naming Convention 7

7. Flexible Module Mounting Layout 8

8. Installation Instructions 9

8.1 Power Supply and Module Wiring 9

8.2 Permitted Bending Range 9

8.3 Magnetic Installation and Removal 10

9. Acceptance Requirements and Test Methods 11

9.1 Display Brightness 11

9.2 Grounding 11

9.3 Lightning Protection 11

1. Scope

This technical manual applies only to the outdoor R4-10S-1921 Pro flexible LED module. The parameters below are for the standard product; customized cabinet frames and curved display structures are available for specific projects.

Pixel Pitch	Module Resolution	Module Size	Refresh Rate
4mm	80*40=3200Dots	320*160*11mm	4200Hz

2. Safety, Handling, and Operating Precautions

Category	Requirement	Details
Environmental Precautions	Temperature Requirements	Storage temperature range: -10°C-30°C. If the temperature exceeds 30°C, cooling measures are required. Operating temperature range: -20°C-40°C. Temperature-control equipment is required outside this range. Module surface temperature during operation: ≤85°C. If this limit is exceeded, install temperature-control equipment.
Environmental Precautions	Humidity Requirements	Storage humidity range: 10%RH-60%RH. If humidity exceeds 60%RH, dehumidification is required. Operating humidity range: 10%RH -90%RH. If humidity is outside this range, condition the environment before normal use.
Environmental Precautions	Corrosive Gas Prevention	Corrosive gases in air containing salt or acid can corrode electronic components and cause crystal leakage and other failures.
Environmental Precautions	Electrostatic Hazard and Lightning Protection	The display metal components, switching power supply enclosure, and cabinet must be properly grounded. Grounding resistance: ≤10Ω; voltage to ground: ≤2V. Prevent electrostatic damage to electronic components and electric-shock injury caused by leakage current.
Operating Precautions	ESD Protection	Installation personnel must wear an ESD wrist strap and ESD gloves. All tools used during assembly must be properly grounded.
Operating Precautions	Display Waterproofing	After installation, ensure that no water can enter the display. Apply waterproof sealant around the display, cabinets, and cabinet joints, and implement strict waterproofing.
Operating Precautions	Hazards of Magnetic Mounting	Magnetic mounting of modules outdoors is not recommended. Outdoor magnetic mounting creates the following hazards: 1. Rain and snow can enter from the front to the rear of the display, immersing and corroding module-side ICs and electronic components, system cards, switching power supplies, and cables, causing premature failure. 2. Magnetic mounting cannot guarantee display flatness or seamless assembly. 3. Magnetic mounting can deform modules in extremely cold weather.
Operating Precautions	Product Batch Control	Products from different batches must not be installed on the same display; otherwise, color blocks (mosaic effect) may appear.
Operating Precautions	Product Wiring	Do not connect the module directly to 220V. Do not reverse the positive and negative module supply terminals.
Operating Precautions	Handling and Transportation	Do not drop, push, squeeze, or press the module, to avoid damaging the display.
Operating Precautions	Installation Torque Control	When wiring the power supply, tighten the terminal screws to prevent loose connectors, high contact resistance, burnt wiring, or product damage. M4 screw torque: 6.0-8.0 Kgf.cm; M3 screw torque: 4.0-6.0 Kgf.cm.
Operating Precautions	Playback Control	Do not display a static image or static text for an extended period, as this can cause serious LED brightness degradation or large-scale LED failure. Play moving images or scrolling text.
Operating Precautions	No Live-Line Work	Do not assemble modules while power is on. Disconnect the main power input before installing modules on the structure. Do not assemble with power and signal cables connected.
Operating Precautions	Loading Program Selection	Use the system card officially recommended by Shenzhen Hantu Jiashi Technology Co., Ltd. and the loading program used by the website's one-click commissioning function to prevent performance abnormalities during commissioning.
Operating Precautions	Parameter Settings	Set the refresh rate to the value specified in this specification to protect normal LED service life.

Category	Requirement	Details
Operating Precautions	Playback Control	Do not display static images, text, or fixed backgrounds for an extended period, as this can cause serious LED brightness degradation or large-scale LED failure. Play moving images or text.
Operating Precautions	Environmental Inspection	Provide temperature and humidity meters at the installation site and monitor the surrounding environment. After heavy rain, promptly inspect the inside of the display for moisture, water droplets, or water vapor.
Operating Precautions	Avoid Construction Around the Installed LED Display	After installation, construction around the LED display is strictly prohibited to prevent high-current surges and dust from affecting the display, such as during operation of welding machines, electric saws, or similar equipment.

3. Product Overview

- Red, green, and blue LED chips are packaged into pixels and arranged on a flexible module structure.
- The integrated driver and input buffer circuitry supports synchronized video, image, and text display.
- The control system drives the RGB LEDs, enabling 43980 hundred million color variations.
- Flexible modules can be creatively assembled for cylindrical, ribbon, wave, concave, and convex display surfaces.

3.1 Product Features

- High-quality LEDs, high contrast, and a flexible silicone rear housing.
- Constant-current drive provides uniform light output with low power consumption.
- Standard high-strength magnets support fast, secure front installation.
- The deep-V silicone housing supports large-angle curved display surfaces.
- Thin and lightweight construction reduces installation depth and enables creative shapes.

3.2 Module Views

Front View	Rear View
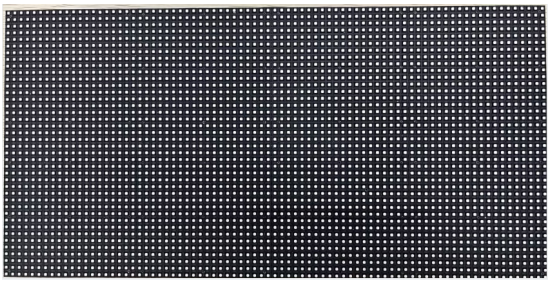	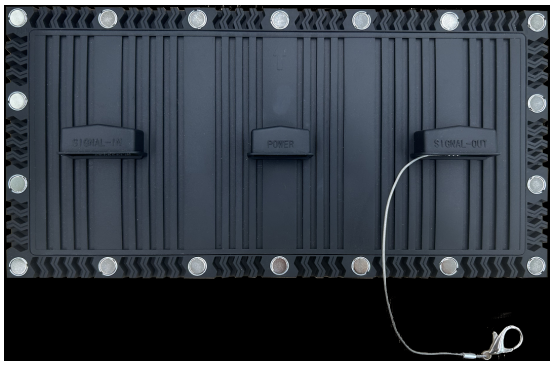

Note: The driver IC uses an SSOP-packaged constant-current driver IC.

3.3 Curved Cabinet Reference

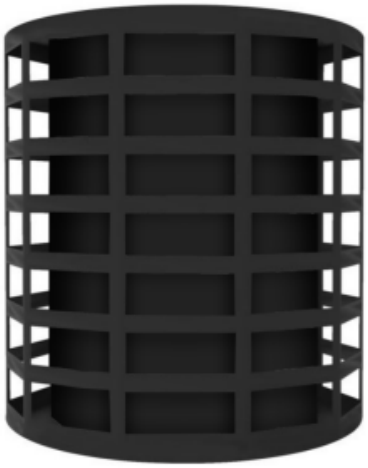

The cabinet frame is project-specific and may be customized to the required radius and installation structure.

4. Technical Specifications

4.1 Display Technical Parameters

Parameter	Value	Parameter	Value
Brightness	≥4500cd/m²	Brightness Uniformity	>0.95
Horizontal Viewing Angle	140±10°	Vertical Viewing Angle	130±10°
Optimal Viewing Distance	≥7.2m	Operating Environment	Outdoor
Maximum Module Power per Square Meter	≤548W/m²	Power Distribution Capacity (÷78% ÷85%)	≤827W/m²
Grayscale	14-15bits each for red, green, and blue	Display Colors	43980 hundred million
Frame Rate	≥60 frames/s	Refresh Rate	4200Hz
Control Method	Computer control, pixel-to-pixel mapping, video synchronization, real-time display	Brightness Adjustment	256 levels, manual/automatic
Input Signals	DVI/VGA/HDMI/DP composite video signals, S-VIDEO, YpbPr(HDTV)	Mean Time Between Failures	≥5000 hours
Operating Temperature Range	-20-40°C	Operating Humidity Range	10%-90%RH (non-condensing)
Protection Features	Overtemperature/overload/power-loss/image compensation/correction technology/overcurrent/overvoltage/lightning protection (optional)	Display Flatness	Horizontal ≤1mm/m²; Vertical ≤1mm/m²

4.2 Flexible Module Technical Parameters

Parameter	Value	Parameter	Value
Pixel Pitch	4mm	Pixel Density	62500Dots/m²
Pixel Configuration	1R1G1B	LED Package	SMD1921
Dimensions (L*W*T)	320*160*11mm	Weight	0.6kg±0.01kg
Structural Feature	Integrated LED and Driver	Module Resolution	80*40=3200Dots
Input Voltage (DC)	4.2±0.1V	Maximum Current	≤6.8A
Module Power	≤28W	Drive Method	1/10 constant-current drive
Modules per 40A Power Supply	4-5 modules	Modules per 50A Power Supply	5-6 modules
Modules per 80A Power Supply	9-10 modules		

5. Module Signal Interface

HUB75E interface definition:

Pin	Signal	Function	Pin	Signal	Function
1	RD1	Red data	2	GD1	Green data
3	BD1	Blue data	4	GND	Power ground
5	RD2	Red data	6	GD2	Green data
7	BD2	Blue data	8	E	Row control
9	A	Row control	10	B	Row control
11	C	Row control	12	D	Row control
13	CLK	Clock	14	LAT	Data latch
15	OE	Enable	16	GND	Power ground

6. Product Model Naming Convention

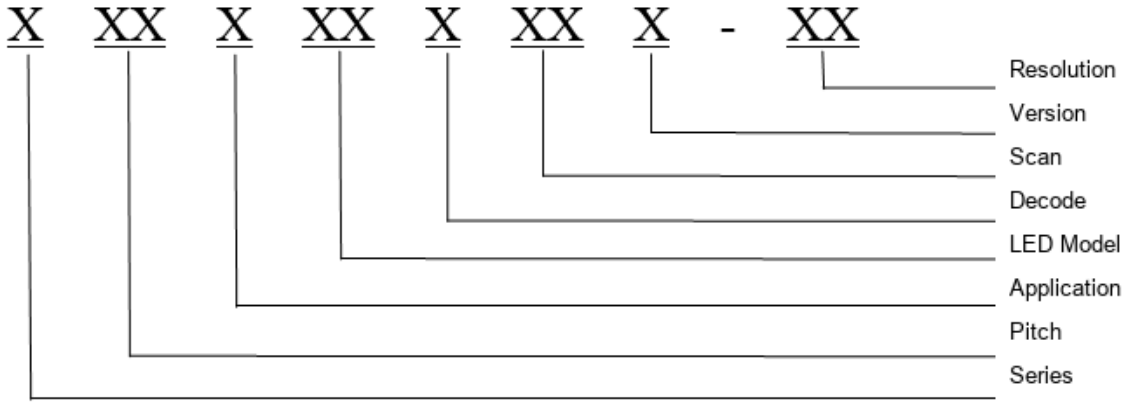

7. Flexible Module Mounting Layout

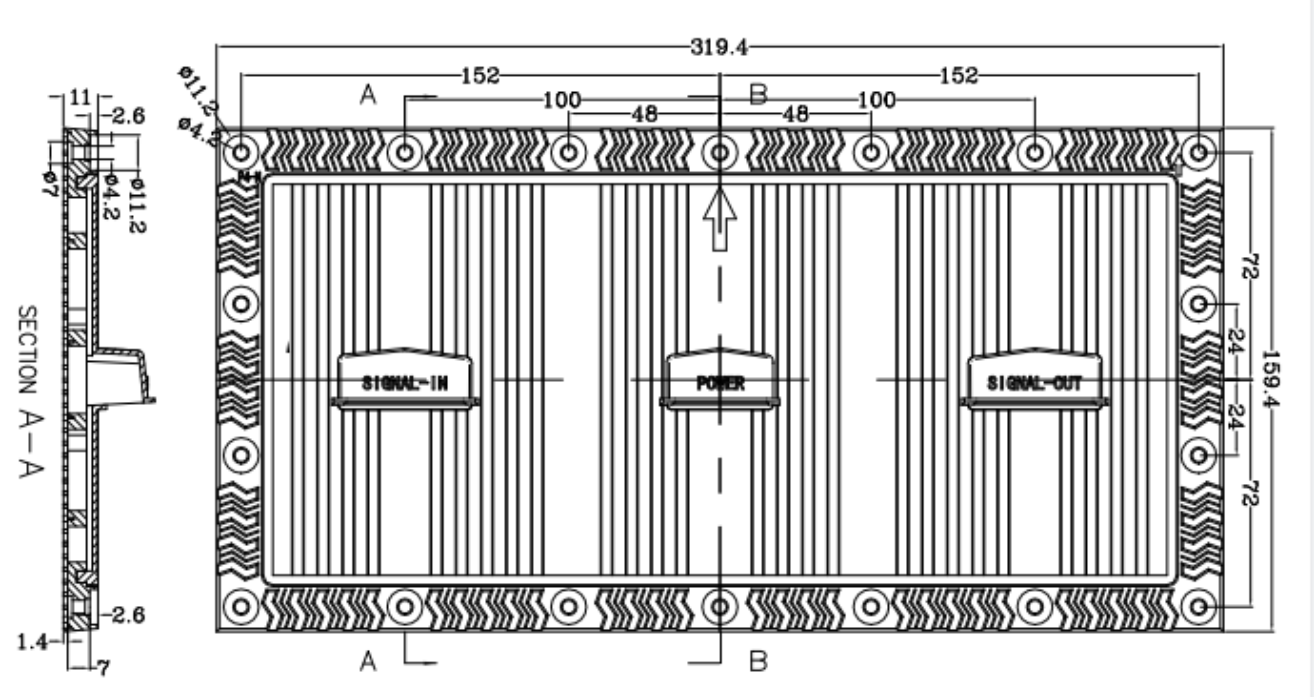

Confirm the ordered product mounting drawing before manufacturing a custom cabinet frame. All dimensions are in mm.

8. Installation Instructions

8.1 Power Supply and Module Wiring

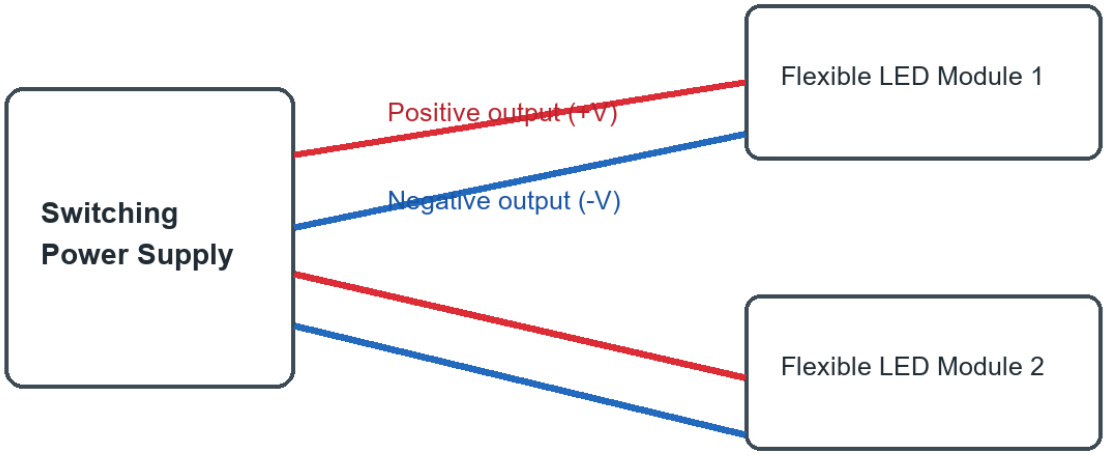

Use one power cable for every two modules.

8.2 Permitted Bending Range

Concave Bend	Convex Bend
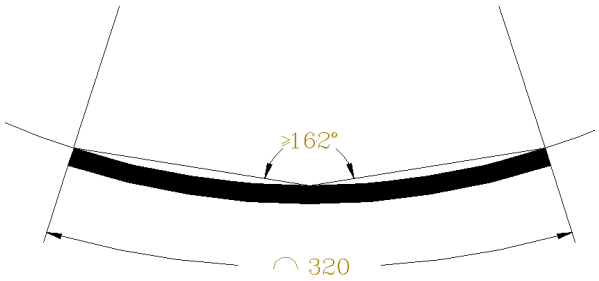	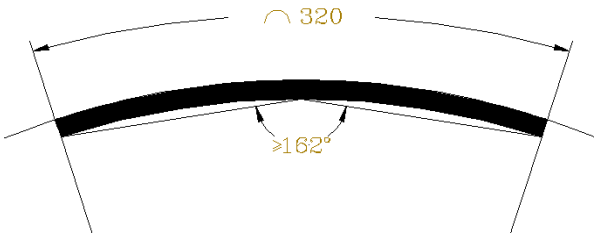

Horizontal assembly supports concave and convex bending angles of at least 162°. Do not over-bend the module. Vertical curved assembly is prohibited because of waterproofing requirements.

8.3 Magnetic Installation and Removal

Magnet Alignment	Step 1	Step 2	Step 3
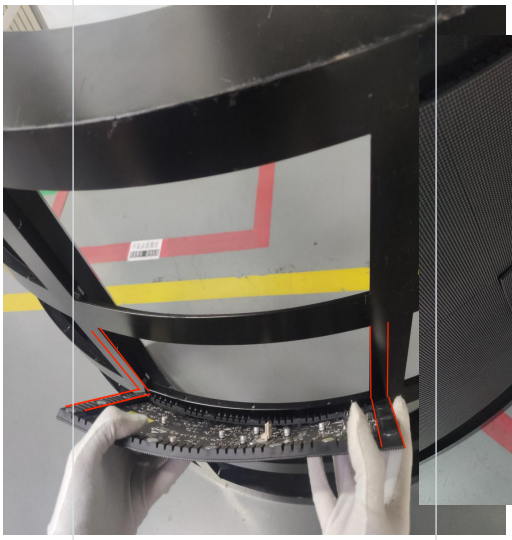	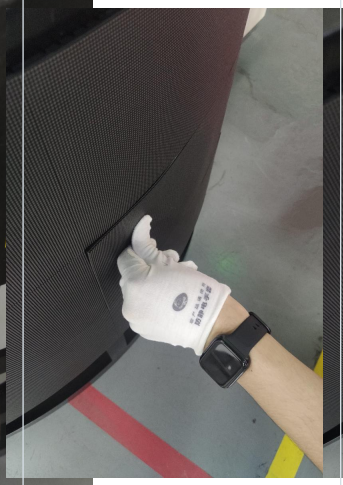	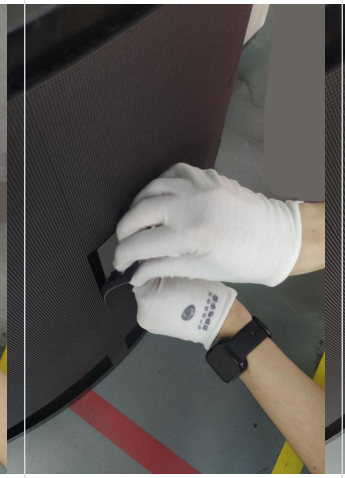	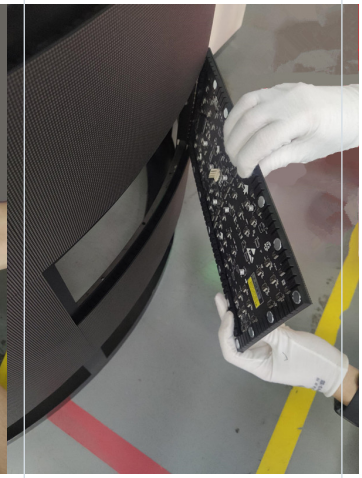

Align every magnet with the cabinet frame so that all magnets sit flat and engage evenly. To remove a module, press gently near the center edge until one corner lifts, support the lifted corner by hand, and remove the module slowly. Do not pull violently or press it against adjacent modules.

9. Acceptance Requirements and Test Methods

9.1 Display Brightness

Set the display to full brightness and set the brightness efficiency in the computer test software to 80%. Within 10 minutes, measure display brightness using a luminance meter. Aim the meter at the display and, preferably, keep it level with the display during measurement. Ensure that the black area of the viewing window covers at least 16 pixels, then adjust the focus and take the measurement.

9.2 Grounding

Properly ground the switching power supply enclosure, cabinet, and display structure. Clearly identify each grounding point and inspect it once every six months.

9.3 Lightning Protection

The building must have a lightning rod or lightning protection belt that is effectively grounded. The distribution box must be fitted with a surge protector. Inspect the lightning protection facilities once every six months.